HY series

HY21002

AIR-OIL HEAT EXCHANGERS

IP68

12 Volt

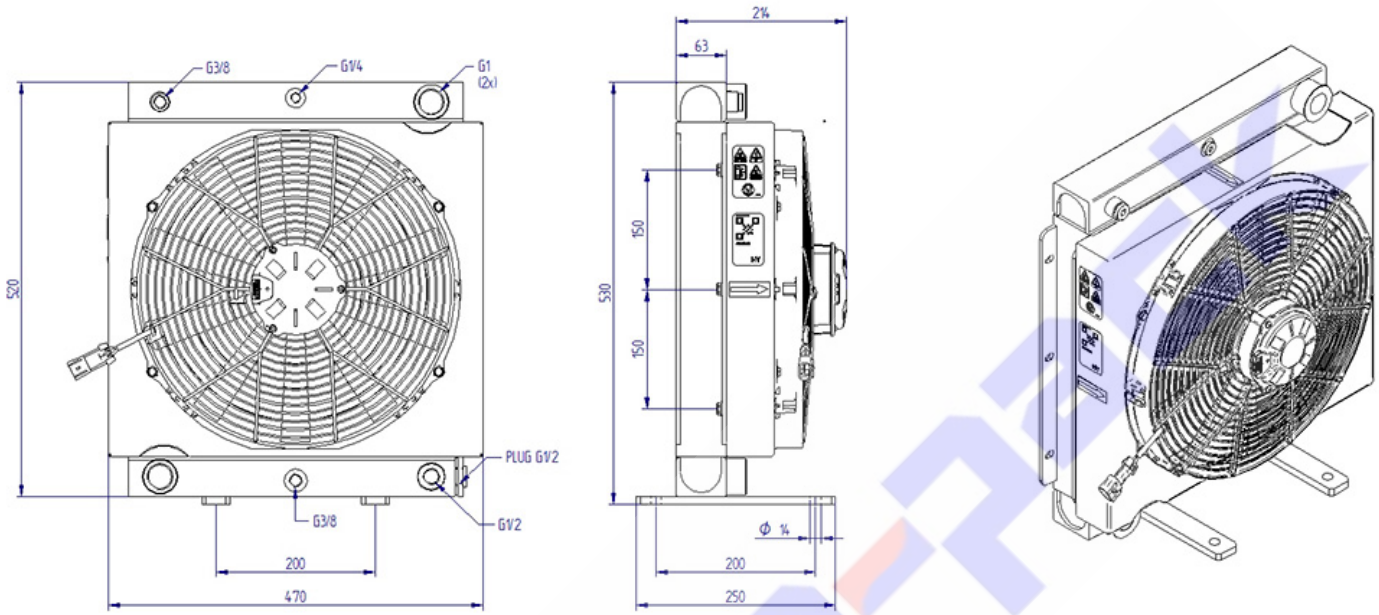

Technical data

Item	Oil flow	Capacity	Weight	Rpm	Voltage	Frequency	Current absorption	Power	Ø Fan	Air flow	Noise level
	(l/min)	(l)	(kg)		(V)	(Hz)	(A)	(W)	(mm)	(m^3/h)	(db(A))
HY21002	35-140	3,3	19		12		18,80	245	385	2460	72,4
HY21004	35-140	3,3	19		24		8,30	208	385	2625	72,2

Performance

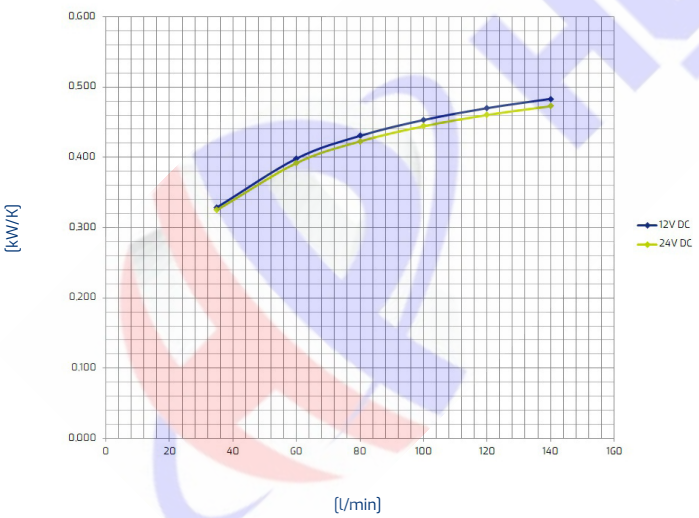

Oil T 80°C
T Amb. 40°C

Pressure drop

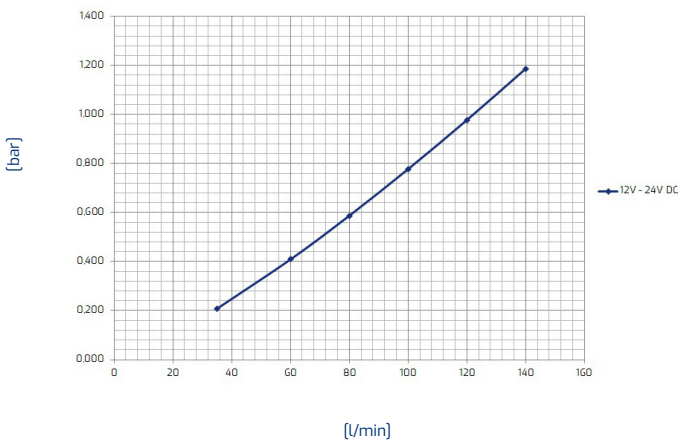

Viscosity - ISO VG 32 Oil					
Oil	22	**32**	46	68	150
Correction factor	0,8	**1**	1,2	1,6	3

HY series

HY21004

AIR-OIL HEAT EXCHANGERS

IP68

24 Volt

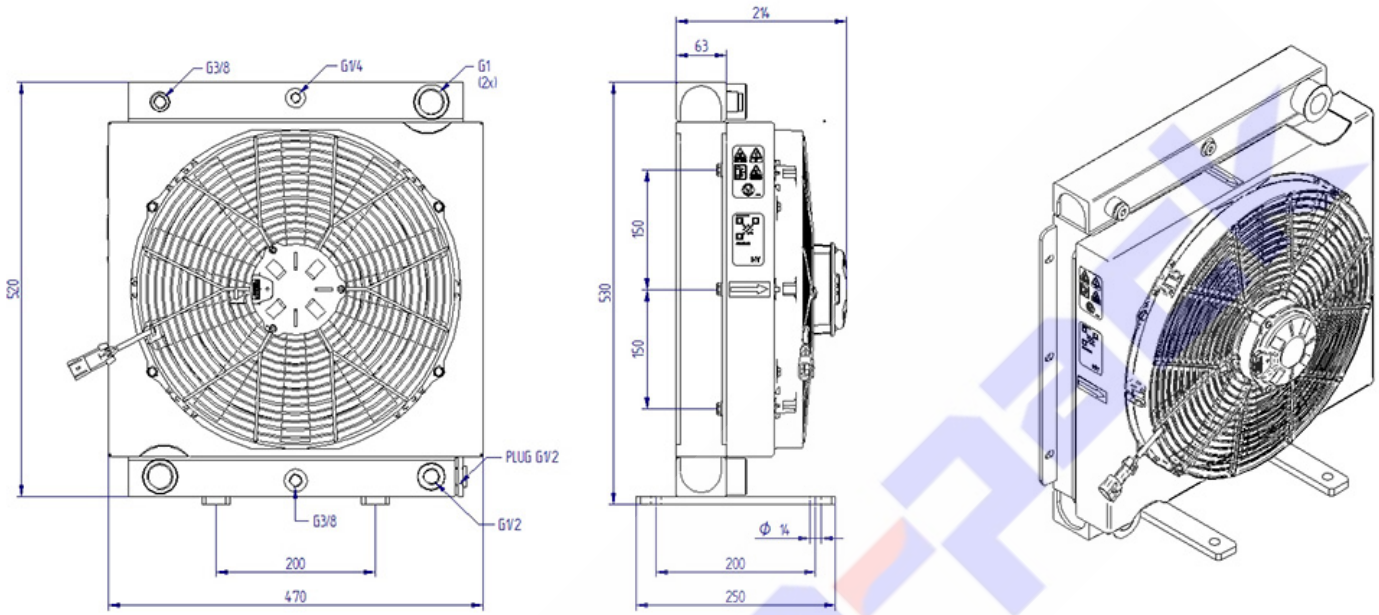

Technical data

Item	Oil flow	Capacity	Weight	Rpm	Voltage	Frequency	Current absorption	Power	Ø Fan	Air flow	Noise level
	(l/min)	(l)	(kg)		(V)	(Hz)	(A)	(W)	(mm)	(m^3/h)	(db(A))
HY21002	35-140	3,3	19		12		18,80	245	385	2460	72,4
HY21004	35-140	3,3	19		24		8,30	208	385	2625	72,2

Performance

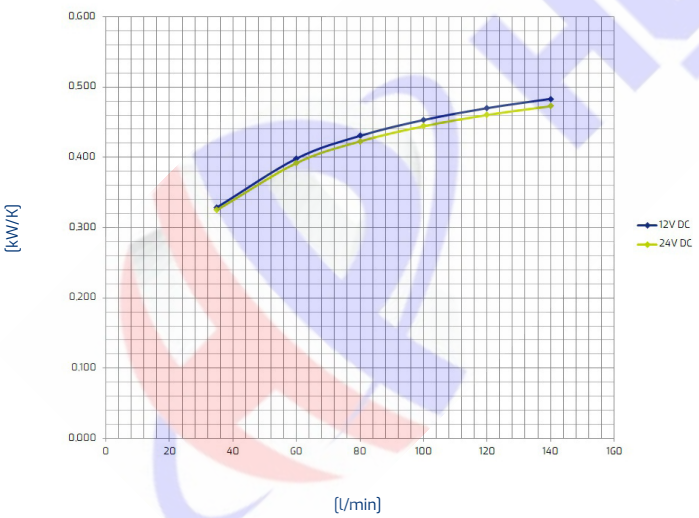

Oil T 80°C
T Amb. 40°C

Pressure drop

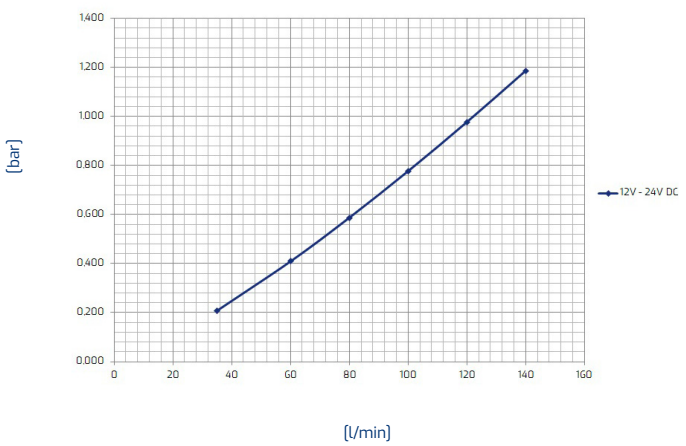

Viscosity - ISO VG 32 Oil					
Oil	22	**32**	46	68	150
Correction factor	0,8	**1**	1,2	1,6	3

HY series

HY21502

AIR-OIL HEAT EXCHANGERS

IP68

12 Volt

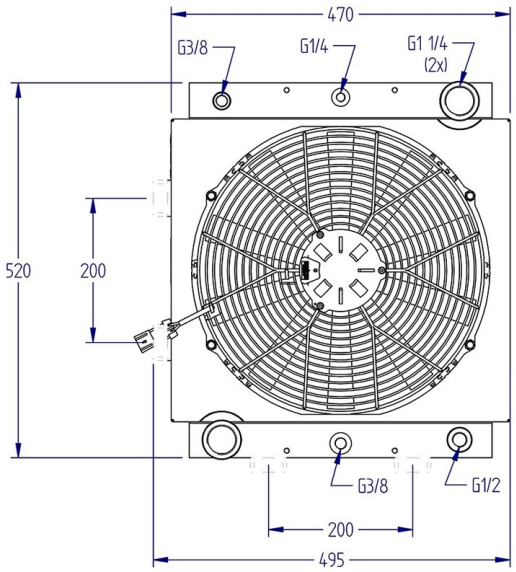

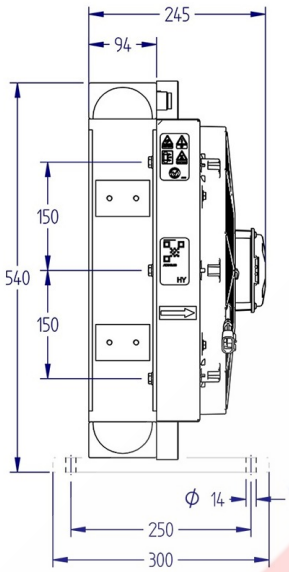

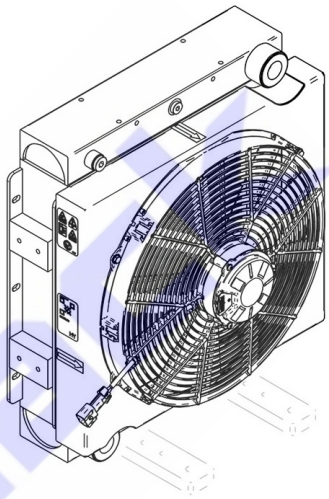

Technical data

Item	Oil flow	Capacity	Weight	Rpm	Voltage	Frequency	Current absorption	Power	Ø Fan	Air flow	Noise level
	(l/min)	(l)	(kg)		(V)	(Hz)	(A)	(W)	(mm)	(m^3/h)	(db(A))
HY21502	35-140	5,3	24,5		12		18,70	240	385	2420	72,4
HY21504	35-140	5,3	24,5		24		8,30	210	385	2320	72,2

Performance

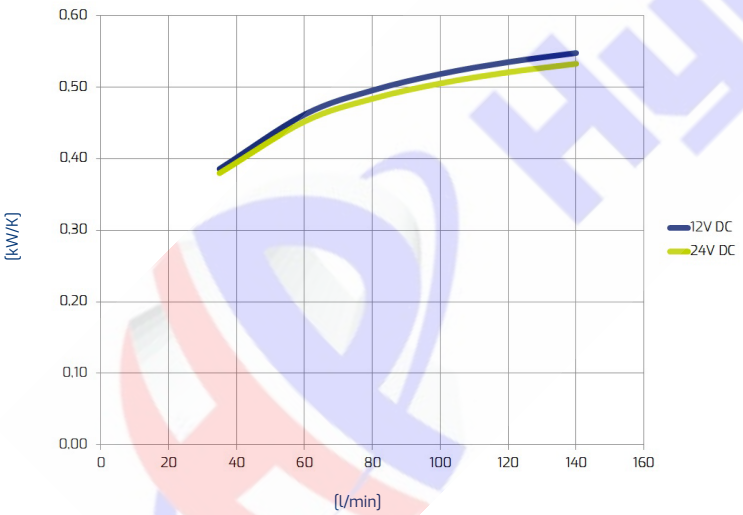

Oil T 80°C
T Amb. 40°C

Pressure drop

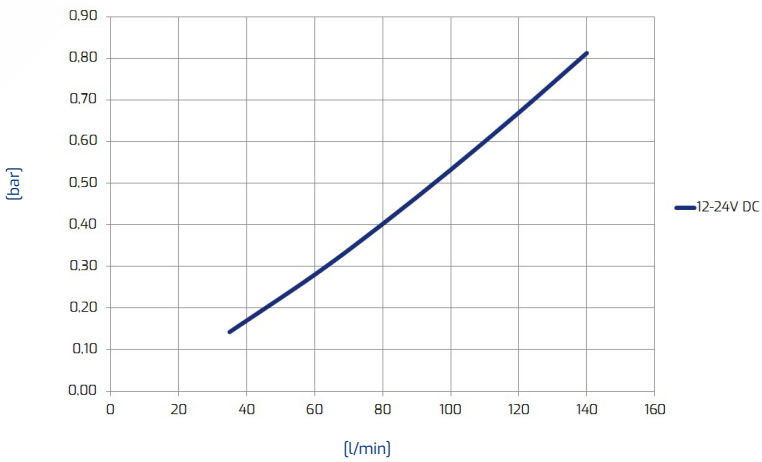

Viscosity - ISO VG 32 Oil					
Oil	22	**32**	46	68	150
Correction factor	0,8	**1**	1,2	1,6	3

HY series

HY21504

AIR-OIL HEAT EXCHANGERS

IP68

24 Volt

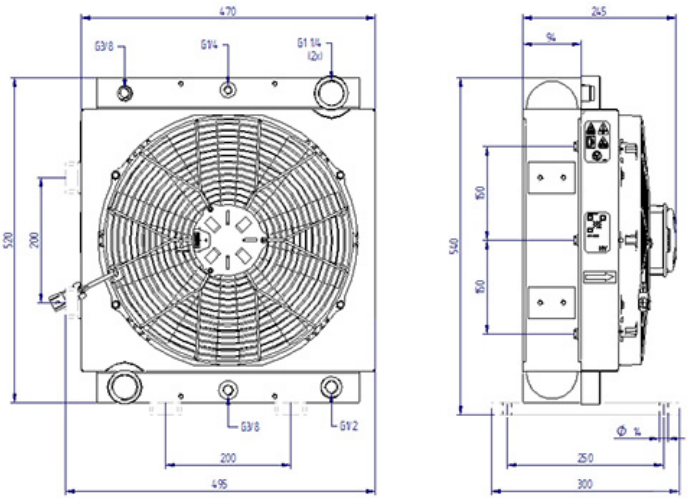

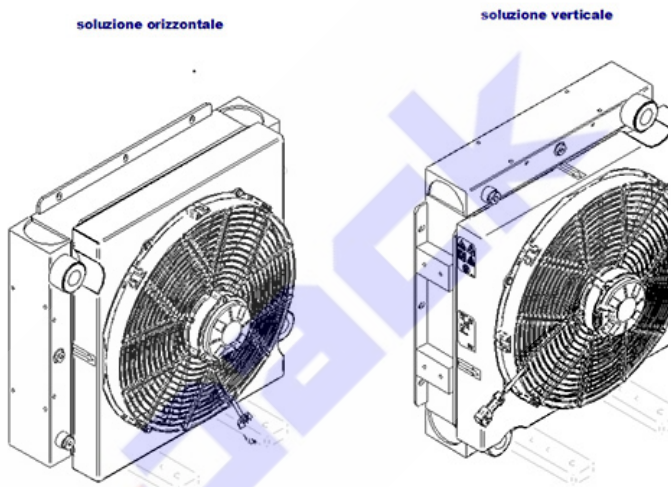

Technical data

Item	Oil flow	Capacity	Weight	Rpm	Voltage	Frequency	Current absorption	Power	Ø Fan	Air flow	Noise level
	(l/min)	(l)	(kg)		(V)	(Hz)	(A)	(W)	(mm)	(m^3/h)	(db(A))
HY21502	35-140	5,3	24,5		12		18,70	240	385	2420	72,4
HY21504	35-140	5,3	24,5		24		8,30	210	385	2320	72,2

Performance

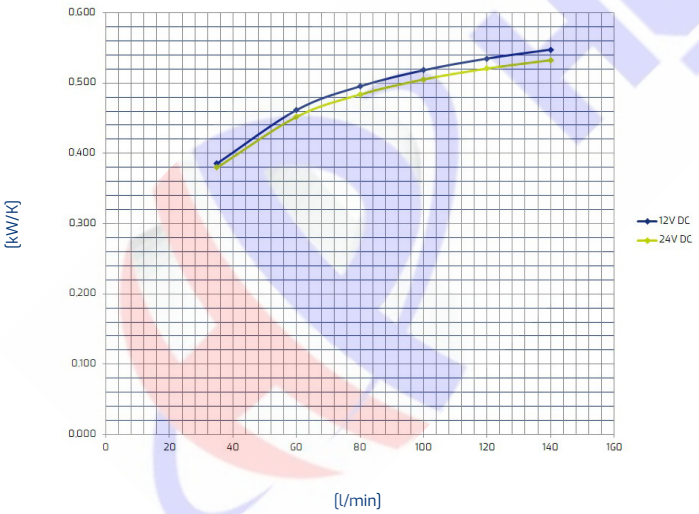

Oil T 80°C
T Amb. 40°C

Pressure drop

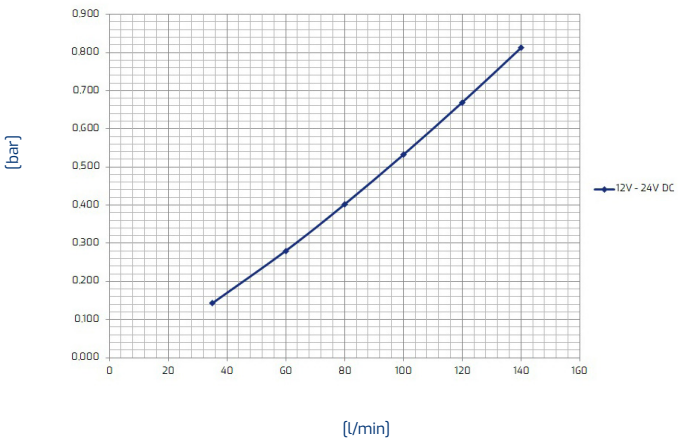

Viscosity - ISO VG 32 Oil					
Oil	22	**32**	46	68	150
Correction factor	0,8	**1**	1,2	1,6	3

HY series

HY22002

AIR-OIL HEAT EXCHANGERS

IP68

12 Volt

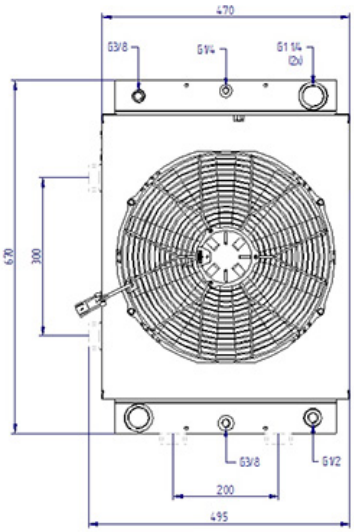

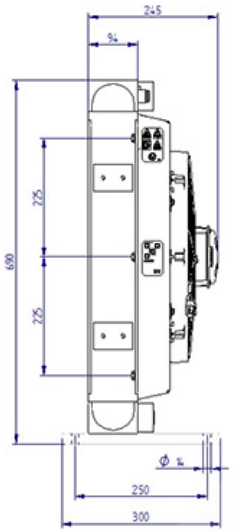

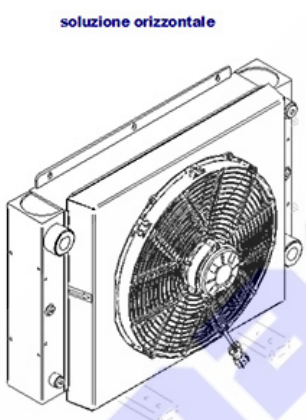

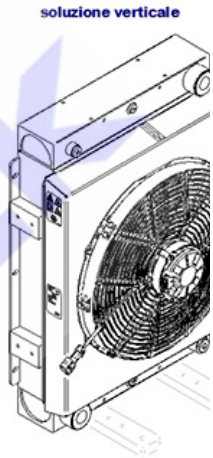

Technical data

Item	Oil flow	Capacity	Weight	Rpm	Voltage	Frequency	Current absorption	Power	Ø Fan	Air flow	Noise level
	(l/min)	(l)	(kg)		(V)	(Hz)	(A)	(W)	(mm)	(m^3/h)	(db(A))
HY22002	40-160	6,8	27		12		18,70	240	385	2801	72
HY22004	40-160	6,8	27		24		8,20	210	385	2881	73

Performance

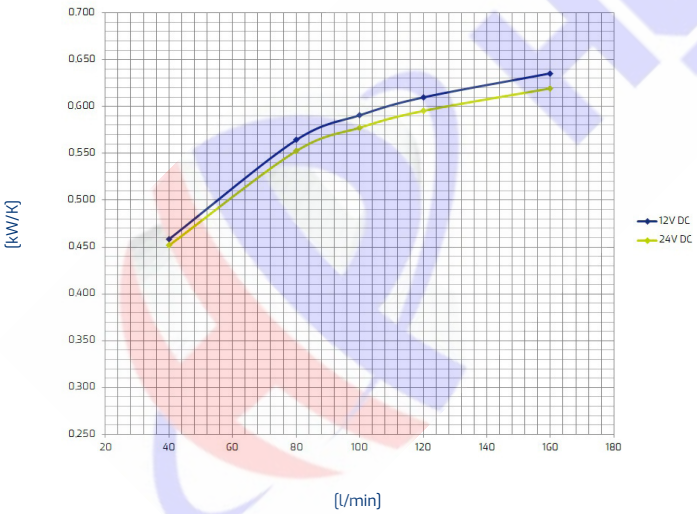

Oil T 80°C
T Amb. 40°C

Pressure drop

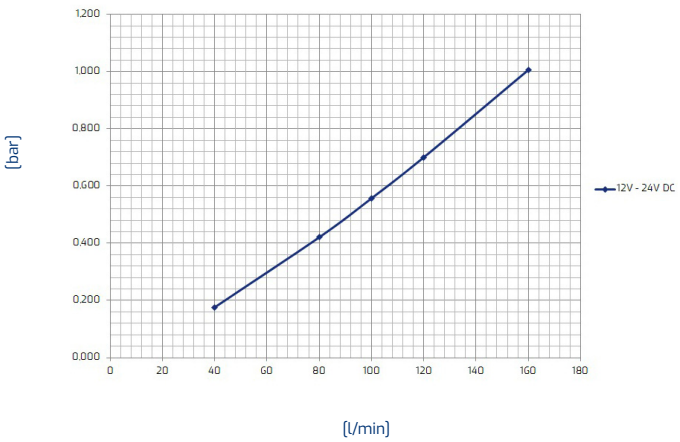

Viscosity - ISO VG 32 Oil					
Oil	22	**32**	46	68	150
Correction factor	0,8	**1**	1,2	1,6	3

HY series

HY22004

AIR-OIL HEAT EXCHANGERS

IP68

24 Volt

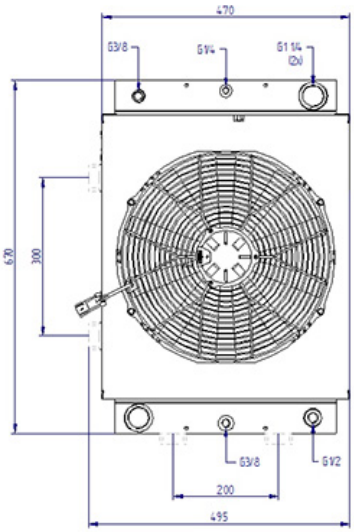

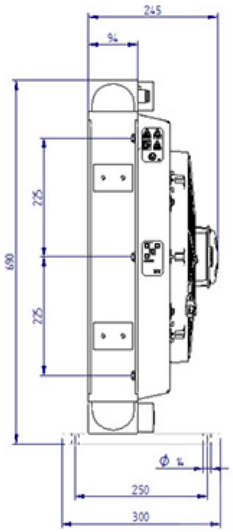

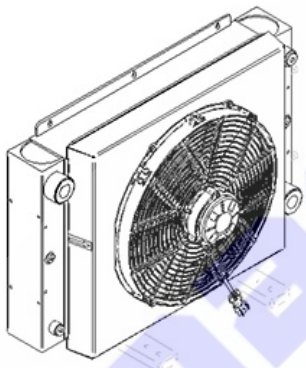

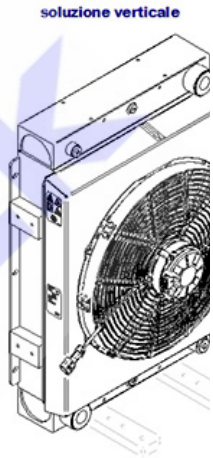

Technical data

Item	Oil flow	Capacity	Weight	Rpm	Voltage	Frequency	Current absorption	Power	Ø Fan	Air flow	Noise level
	(l/min)	(l)	(kg)		(V)	(Hz)	(A)	(W)	(mm)	(m^3/h)	(db(A))
HY22002	40-160	6,8	27		12		18,70	240	385	2801	72
HY22004	40-160	6,8	27		24		8,20	210	385	2881	73

Performance

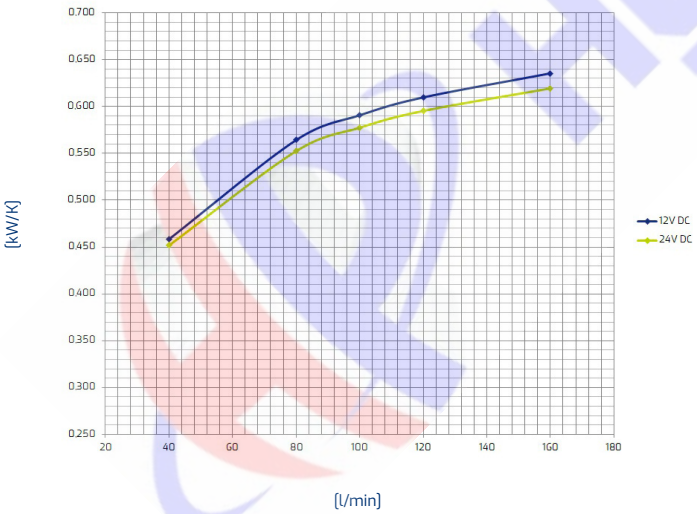

Oil T 80°C
T Amb. 40°C

Pressure drop

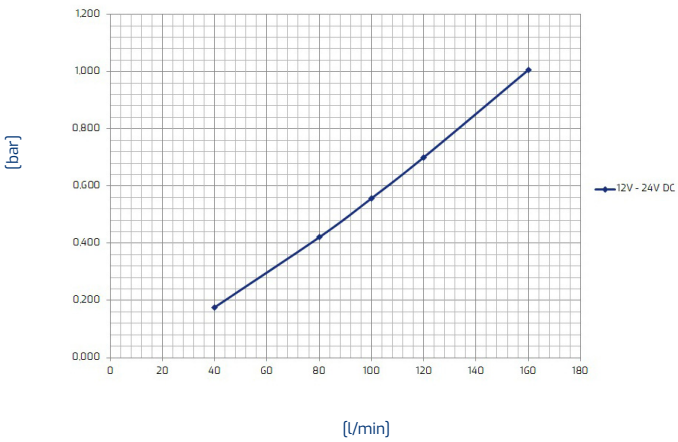

Viscosity - ISO VG 32 Oil					
Oil	22	**32**	46	68	150
Correction factor	0,8	**1**	1,2	1,6	3

HY series

HY22502

AIR-OIL HEAT EXCHANGERS

IP68

12 Volt

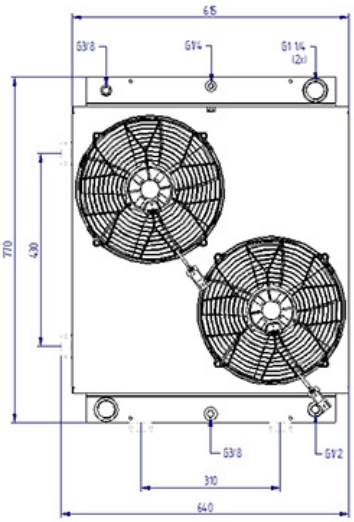

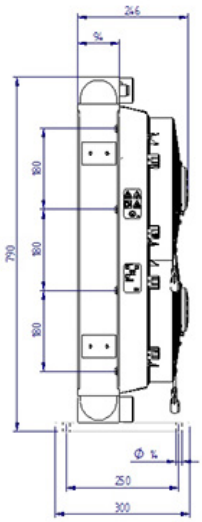

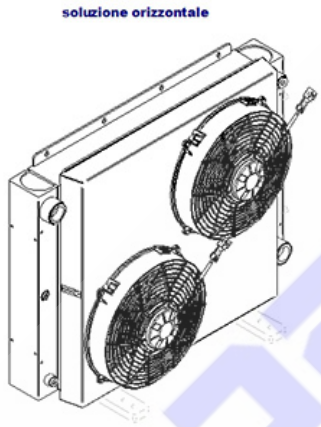

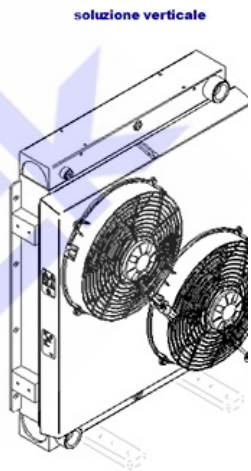

Technical data

Item	Oil flow	Capacity	Weight	Rpm	Voltage	Frequency	Current absorption	Power	Ø Fan	Air flow	Noise level
	(l/min)	(l)	(kg)		(V)	(Hz)	(A)	(W)	(mm)	(m^3/h)	(db(A))
HY22502	45-180	10	44		12		20,40	180	305 (2x)	3900	76,4
HY22504	45-180	10	44		24		8,10	230	305 (2x)	4184	76,7

Performance

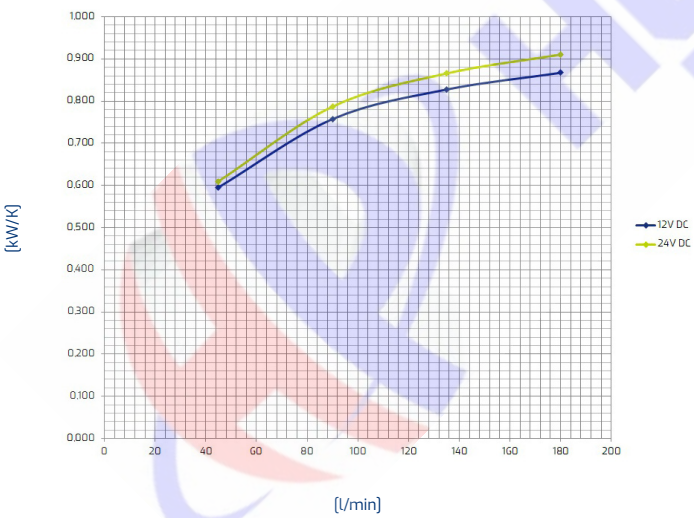

Oil T 80°C
T Amb. 40°C

Pressure drop

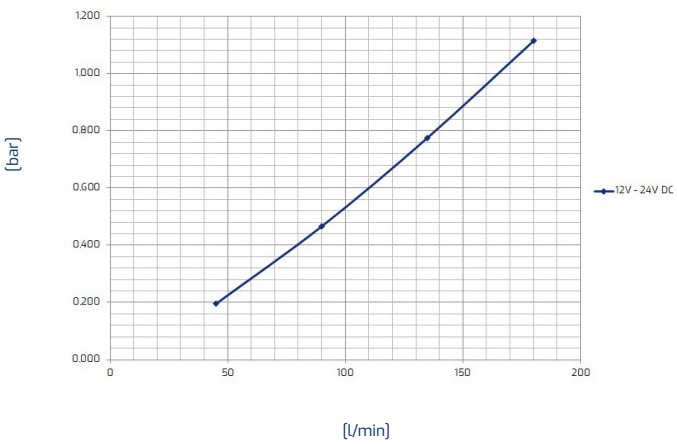

Viscosity - ISO VG 32 Oil					
Oil	22	**32**	46	68	150
Correction factor	0,8	**1**	1,2	1,6	3

HY series

HY22504

AIR-OIL HEAT EXCHANGERS

IP68

24 Volt

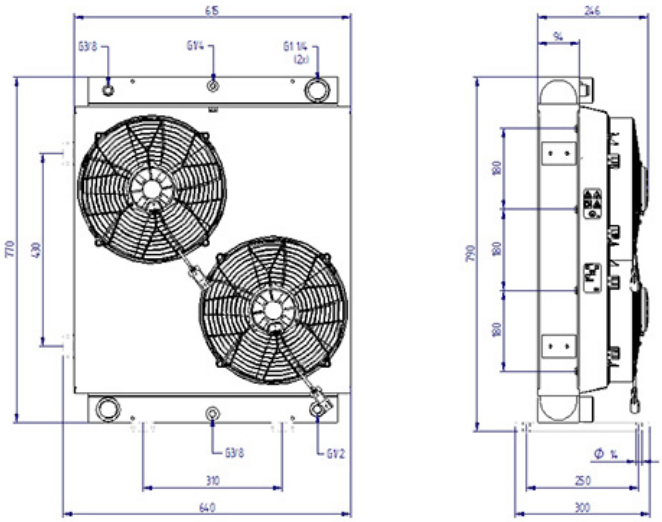

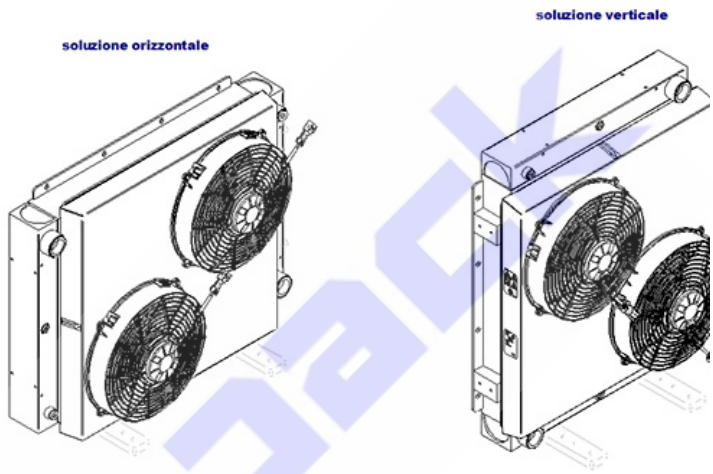

Technical data

Item	Oil flow	Capacity	Weight	Rpm	Voltage	Frequency	Current absorption	Power	Ø Fan	Air flow	Noise level
	(l/min)	(l)	(kg)		(V)	(Hz)	(A)	(W)	(mm)	(m^3/h)	(db(A))
HY22502	45-180	10	44		12		20,40	180	305 (2x)	3900	76,4
HY22504	45-180	10	44		24		8,10	230	305 (2x)	4184	76,7

Performance

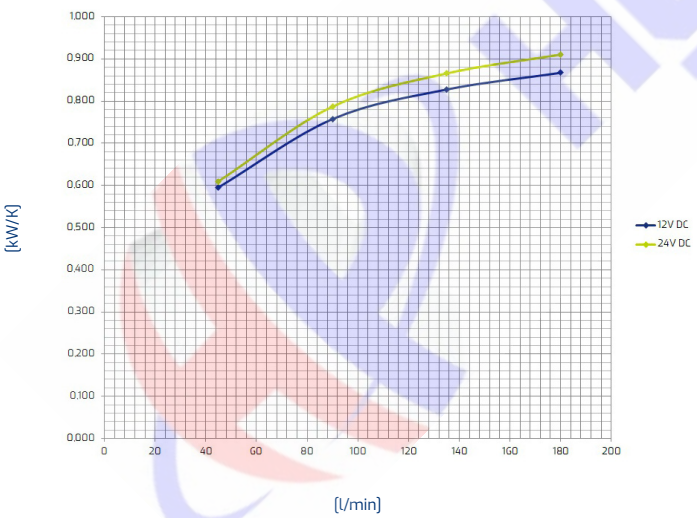

Oil T 80°C
T Amb. 40°C

Pressure drop

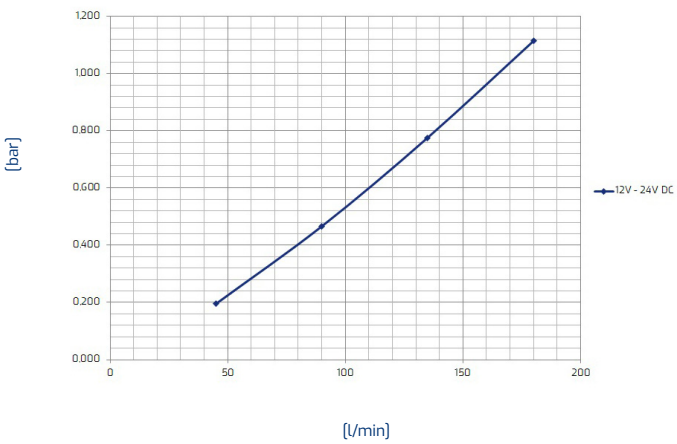

Viscosity - ISO VG 32 Oil					
Oil	22	**32**	46	68	150
Correction factor	0,8	**1**	1,2	1,6	3